REV.	ECN NO.	DATE
06	ADD PART NO.	09.4.25

PART NO.LIST

NO	PART NO.	PLATING	MATERIAL
1	A113-88GF-A004	AU G/F"	PC UL94-V2
2	A113-8830-A004	AU 30U"	PC UL94-V2
3	A113-8850-A004	AU 50U"	PC UL94-V2
4	A113-8815-A004	AU 15U"	PC UL94-V2
5	A113-8803-A004	AU 3U"	PC UL94-V2
6	A113-8806-A004	AU 6U"	PC UL94-V2
7	A113-8850-B004	AU 50U"	PC UL94-V0

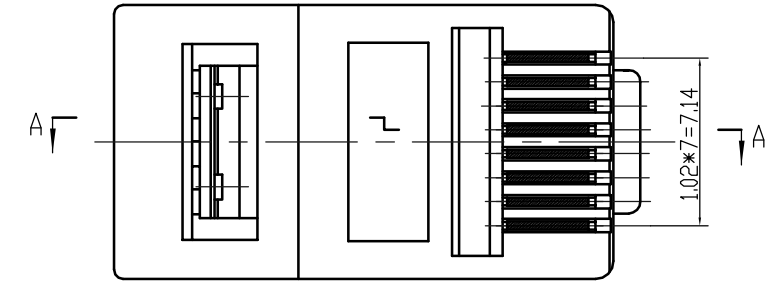

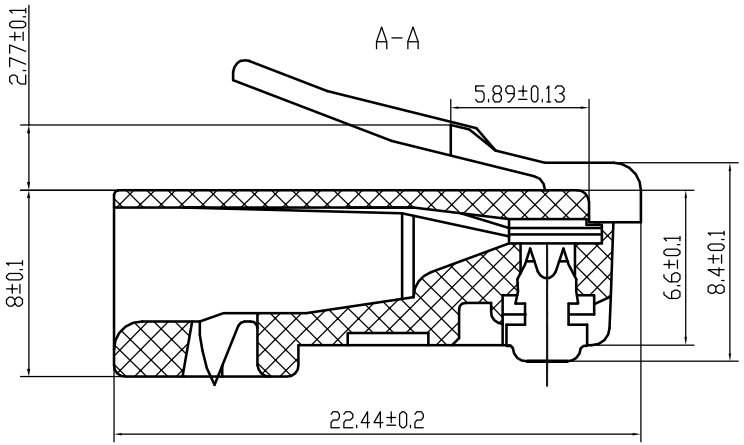

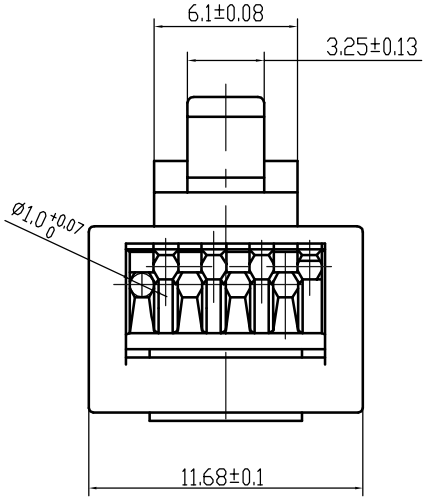

SPECIFICATION

1.Insulation Resistance:1000 Megohms min;
2.Withstand Voltage:1000V, AC/minute.
3.Durability:1000 mating circles min.

NO.	DWG NO.	NAME	DESCRIPTION
3	C07100801	LONG BLADE	QSn6.5-0.1 T=0.35
2	QWY-1209-1	BLADE	QSn6.5-0.1 T=0.35
1	H08112401	CAT6 8P8C PLUG	PC TRANSPARENCE

RoHS Compliant

Hangzhou Xitianqi Import&Export Co., Ltd.	TOLERANCES: 0~15 ±0.15; 15~30 ±0.2; 30~ ±0.25; ANGLES: ±1°	MATERIAL: SEE TABLE	DESIGNED:	NAME: CAT6 8P8C PLUG	
FIRST ANGLE PROJECTION; A4 SIZE; SCALE 1:1; UNIT mm; CUSTOMER:		FINISH: SEE TABLE	CHECKED:	DWG NO: K08120901	REV
		SHEET 1 OF 1	APPROVED:	PART NO: SEE TABLE	06